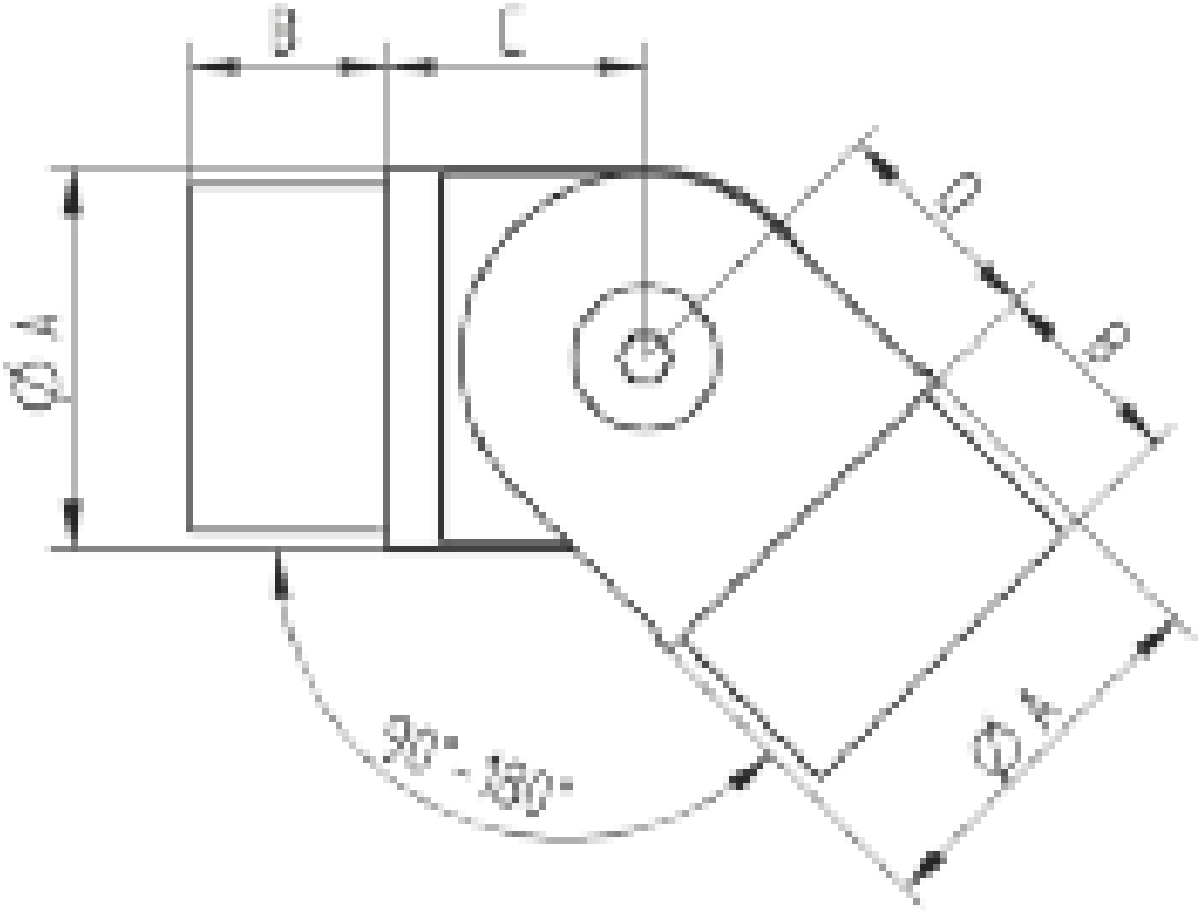RACCORD ORIENTABLE TUBE MAIN COURANTE