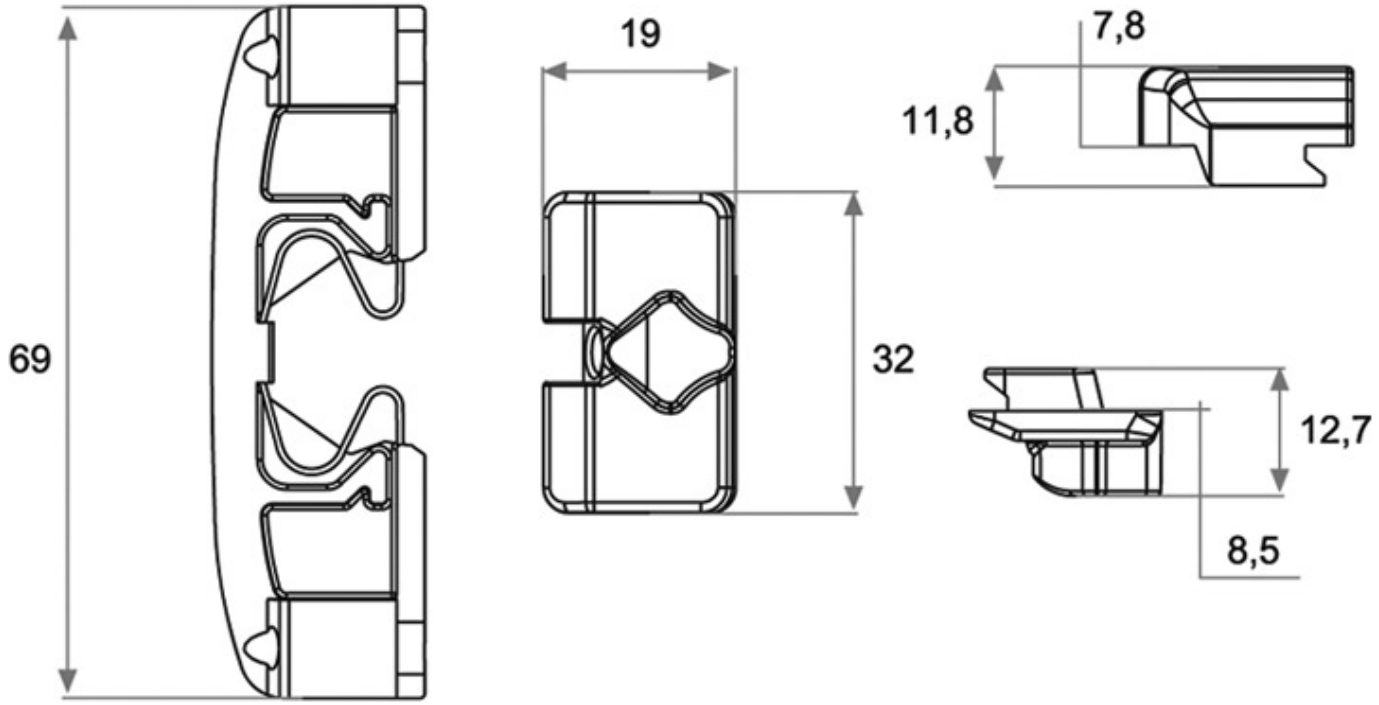HOUSSETTE